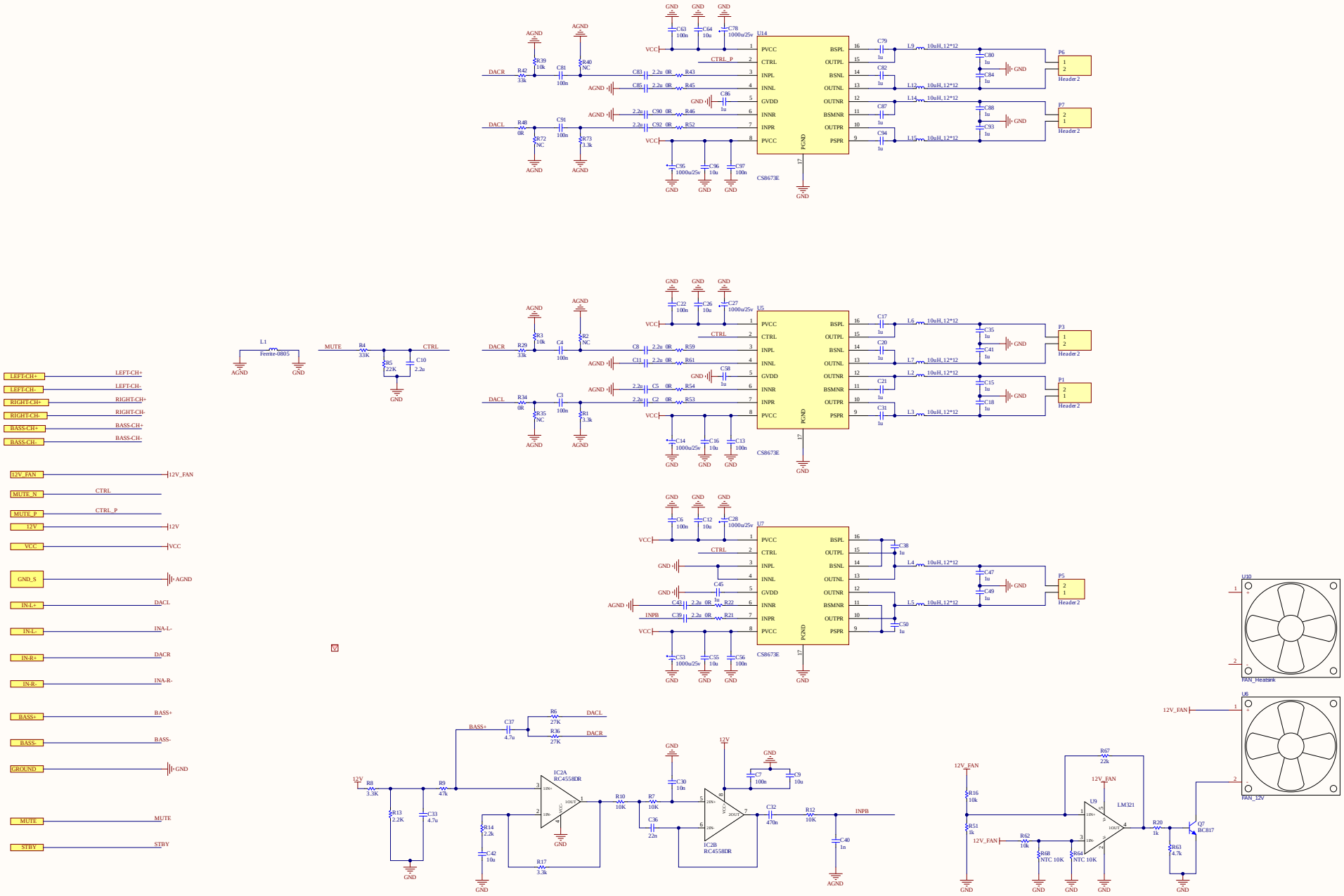
U14
CS8673E
U5
CS8673E
U7
CS8673E
P6
P7
P3
P1
P5
Header 2
L1
Ferrite-0805
MUTE
CTRL
DACR
DACL
VCC
GND
AGND
LEFT-CH+
LEFT-CH-
RIGHT-CH+
RIGHT-CH-
BASS-CH+
BASS-CH-
12V_FAN
MUTE_N
MUTE_P
12V
GND_S
IN-L+
IN-L-
IN-R+
IN-R-
BASS+
BASS-
GROUND
STBY
INA-L-
INA-R-
INPB
IC2A
RC4558DR
IC2B
RC4558DR
U10
FAN_Heatsink
U6
FAN_12V
U9
LM321
Q7
BC817
NTC 10K

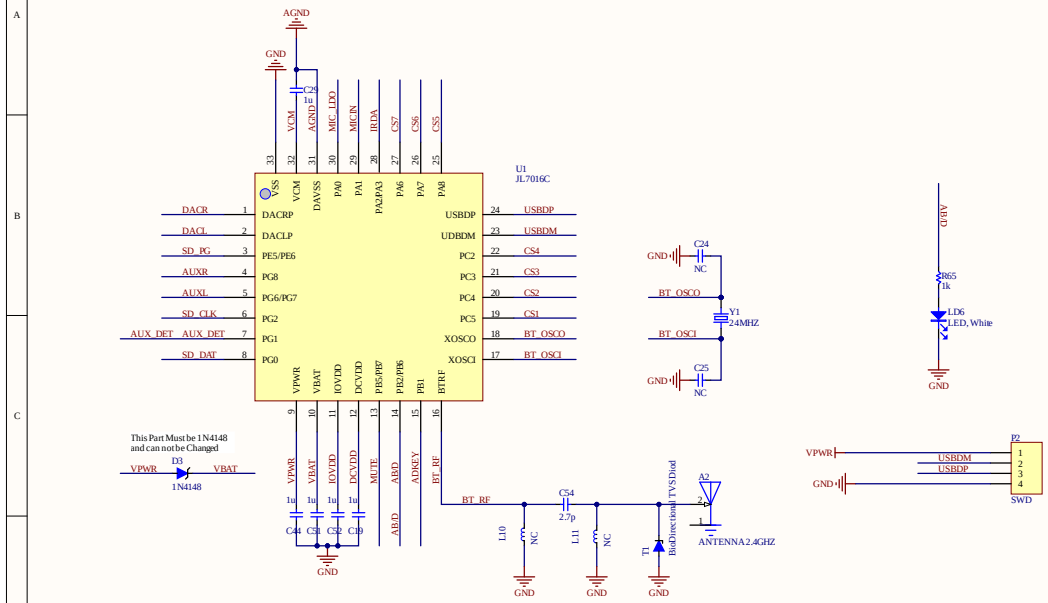

This Part Must be 1N4148
and can not be Changed

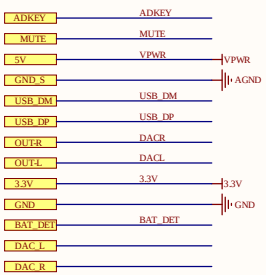

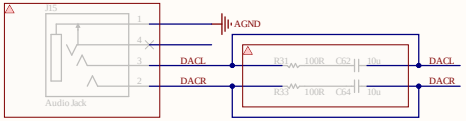

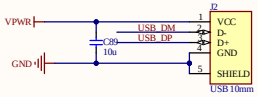

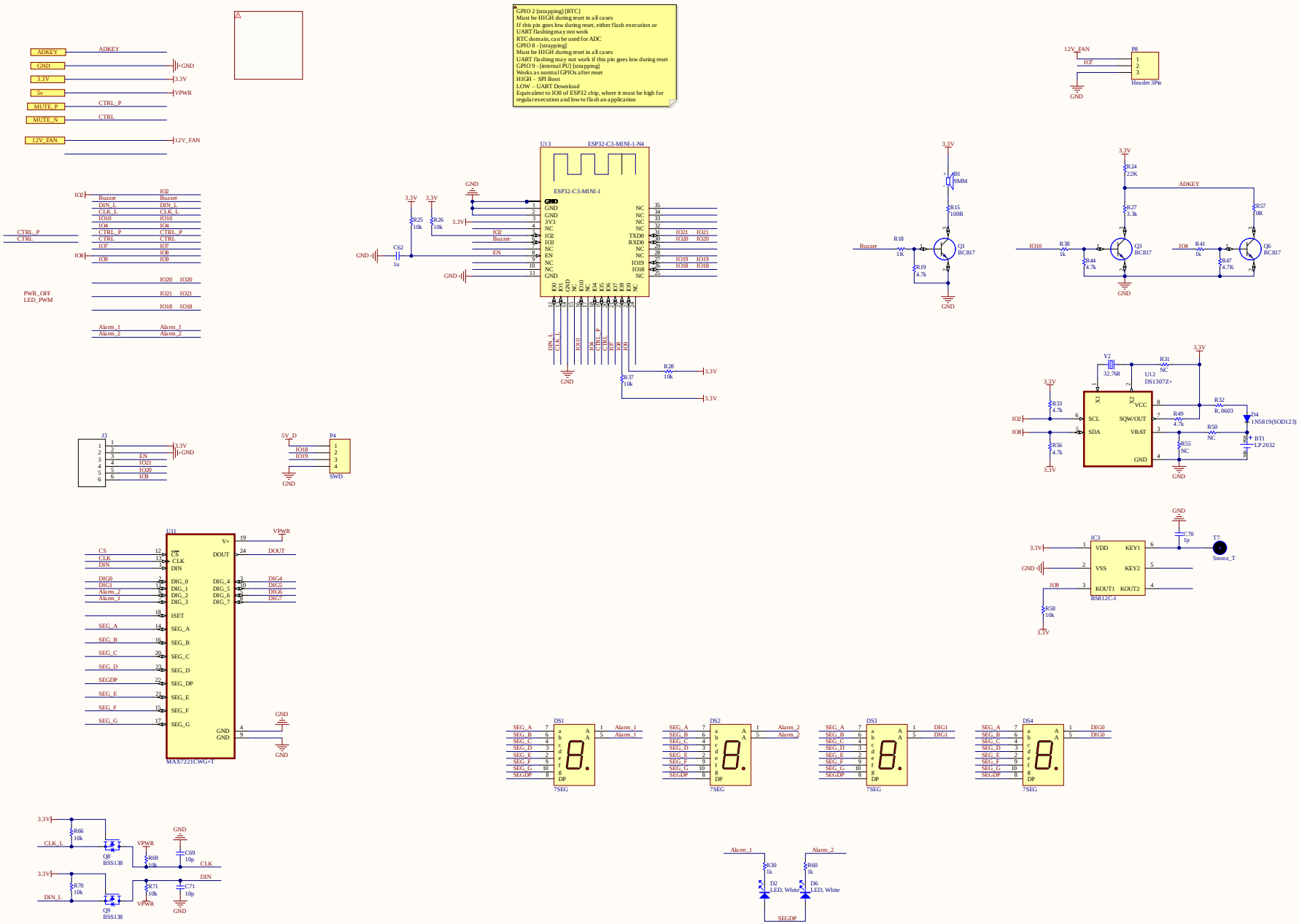

Title		
Size A2	Number	Revision
Date: 9/28/2025	Sheet of	
File: C:\Myprojects\..\Clock.SchDoc	Drawn By:	

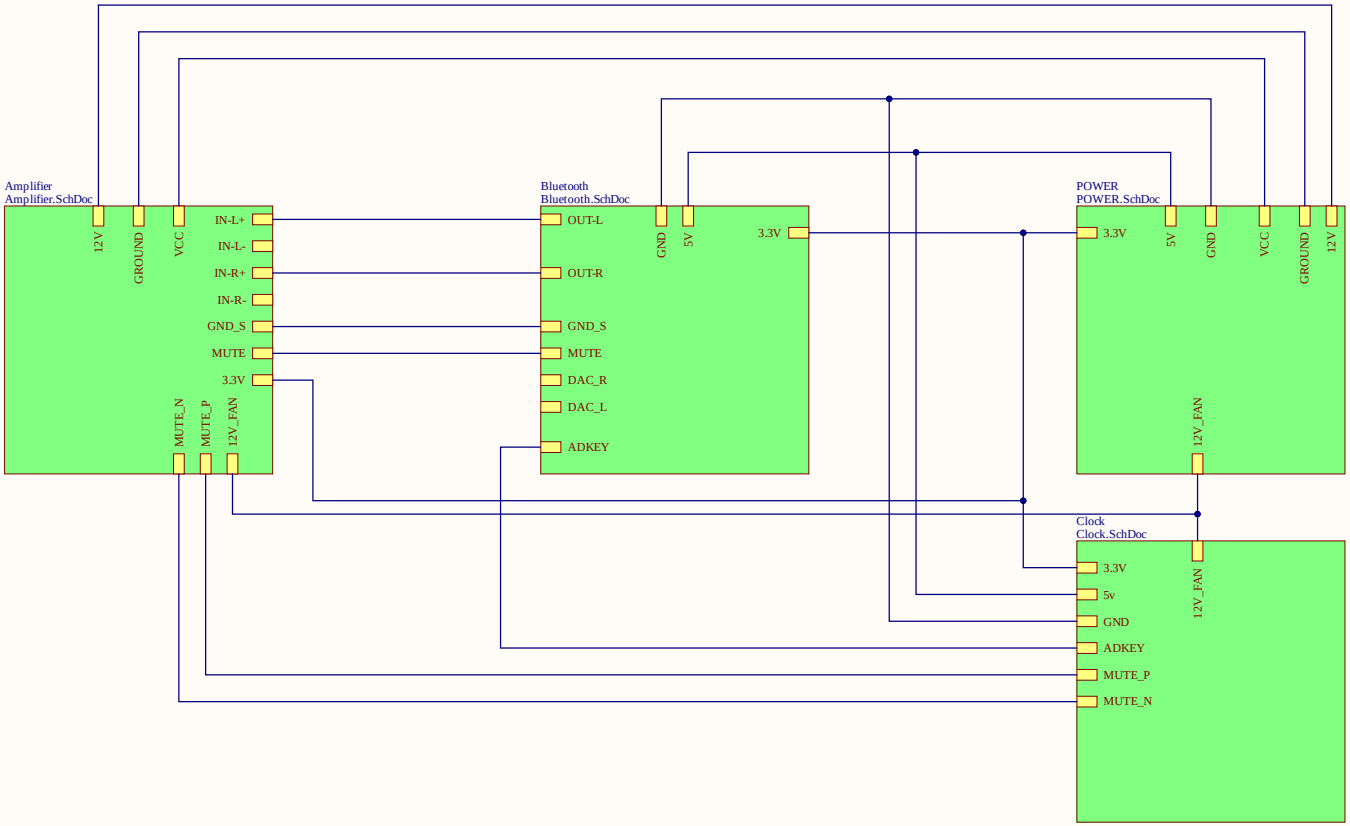

Title *			
Size: A3	Number: *.	Revision: *	
Date: 9/28/2025	Time: 10:37:33 AM	Sheet * of 5	
File: C:\Myprojects\Personal_git_Project\Nora\1_PCB\7_TEST\PCB_NORA Skin\NORA_Clock_V0.2\NORA_Clock_V0.2.SchDoc			

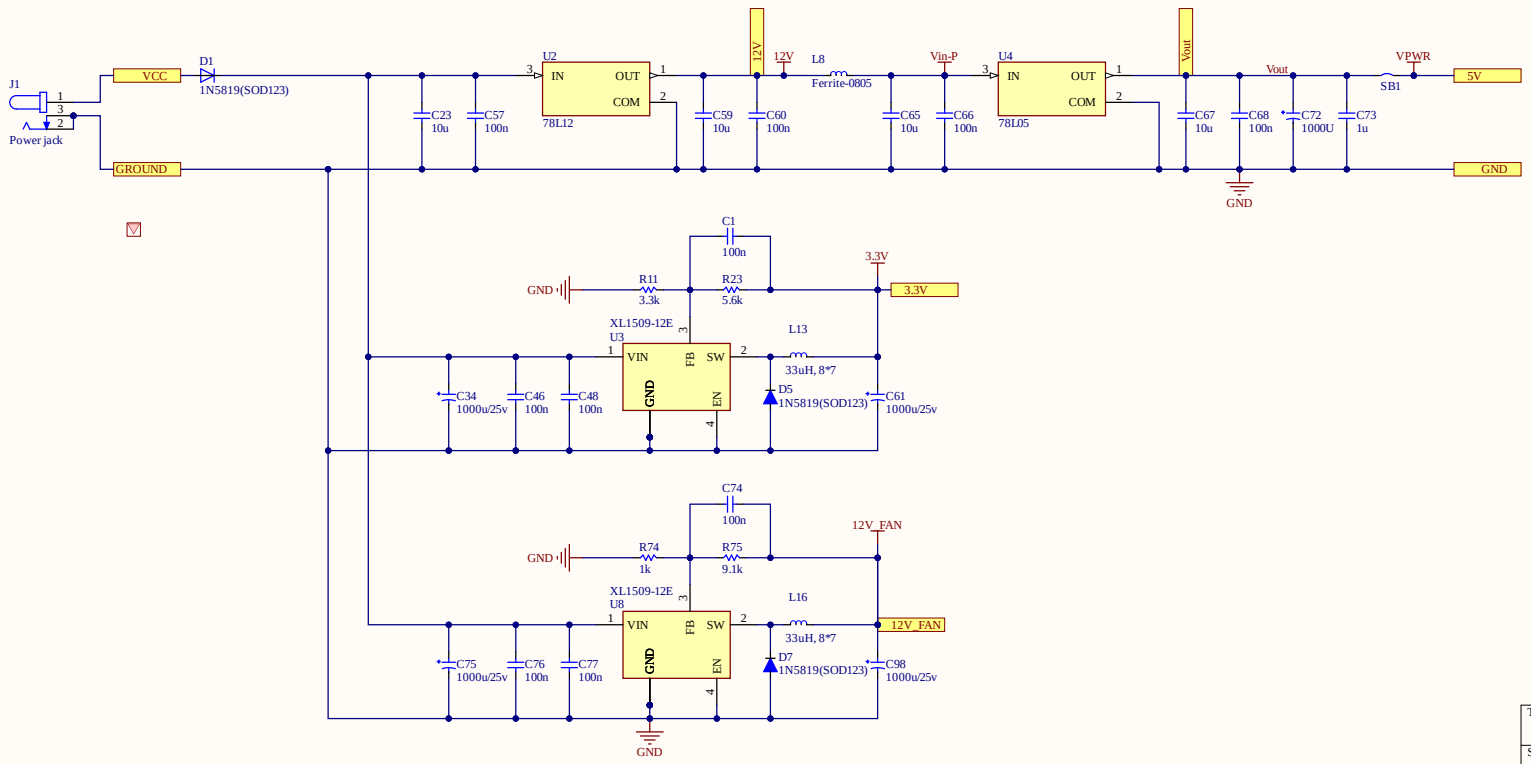

Title		
Size A3	Number	Revision
Date: 9/28/2025		Sheet of
File: C:\Myprojects\..\POWER.SchDoc		Drawn By:

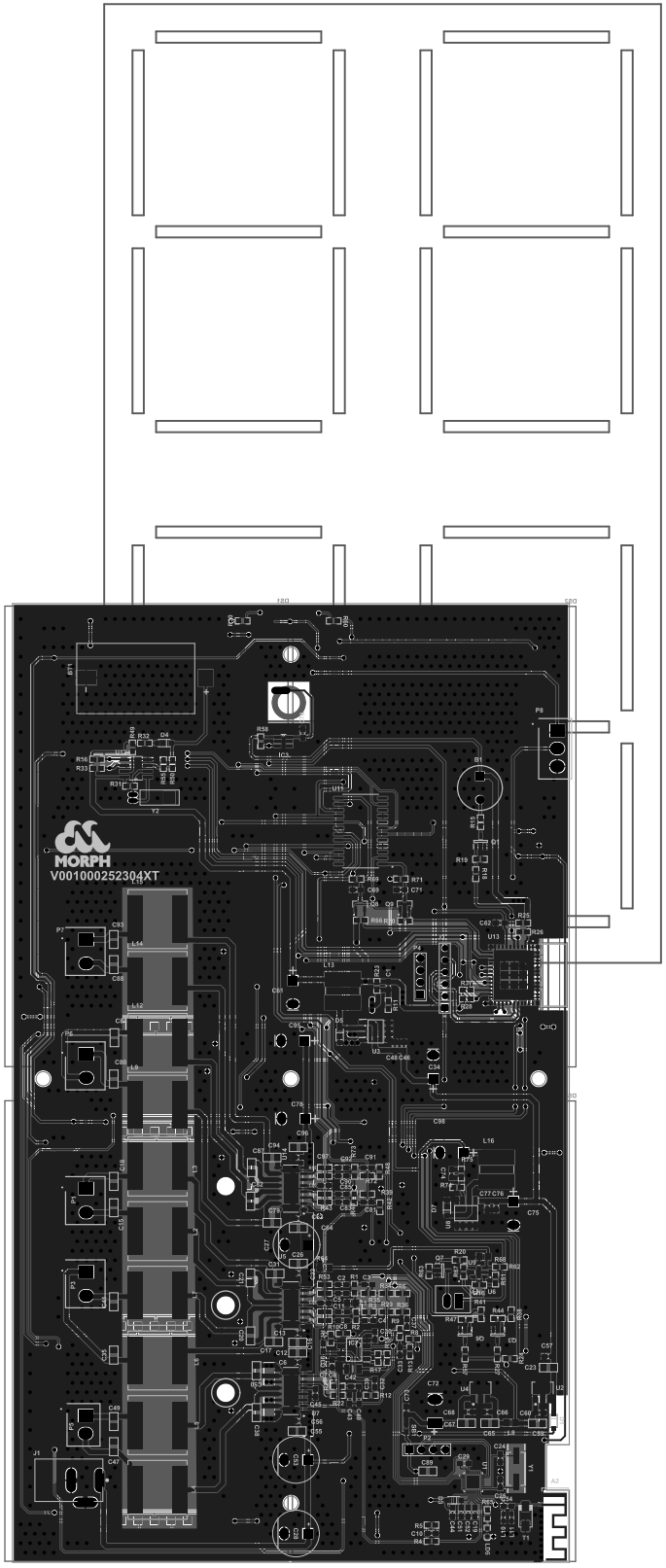
MORPH
V001000252304XT

Board Stack Report